Product Features

- ✧ Supports 1.25Gbps/1.0625Gbps bit rates
- ✧ Bi-Directional SC/PC connector
- ✧ Hot pluggable SFP footprint
- ✧ 1490nm DFB laser and 1550nm APD photo detector
- ✧ 1550nm DFB laser and 1490nm APD photo detector
- ✧ 37dB link budget for up to 160km transmission on G.652 SMF
- ✧ Low power consumption, < 1.0W
- ✧ Digital Diagnostic Monitor Interface
- ✧ Compliant with SFP MSA and SFF-8472
- ✧ Very low EMI and excellent ESD protection
- ✧ Operating case temperature: Commercial:0 to 70 °C
  Industrial:-40 to 85 °C

Applications

- ✧ Gigabit Ethernet
- ✧ Fiber Channel
- ✧ Switch to Switch interface
- ✧ Switched backplane applications
- ✧ Router/Server interface
- ✧ Other Optical Links

Ordering Information

Part Number	Output Power	Rec. Sens	Data Rate	Wavelength	Distance
FH-SB4512CDS120	*3 ~ 7 db*	*-34db*	*1.25G*	*TX1490/RX1550nm*	*160km*

General

FH-SB4512CDS160 SFP-BIDI transceivers are high performance, cost effective modules supporting dual data-rate of 1.25Gbps/1.0625Gbps and 120km transmission distance with SMF.The transceiver consists of three sections: a DFB laser transmitter, a PIN photodiode integrated with a trans-impedance preamplifier (TIA) and MCU control unit. All modules satisfy class I laser safety requirements. The transceivers are compatible with SFP Multi-Source Agreement (MSA) and SFF-8472. For further information, please refer to SFP MSA.

Absolute Maximum Ratings

Parameter	Symbol	Min.	Max.	Unit	Note
Supply Voltage	Vcc	-0.5	4.0	V	
Storage Temperature	Ts	-40	85	°C	
Relative Humidity	RH	0	85	%	

Note: Stress in excess of the maximum absolute ratings can cause permanent damage to the module

General Operating Characteristics

Parameter	Symbol	Min.	Typ	Max.	Unit	Note
Data Rate	DR		1250		Gb/s	
Supply Voltage	Vcc	3.13	3.3	3.47	V	
Supply Current	Icc_5			220	mA	
Operating Case Temp.	Tc	0		70	°C	
Operating Case Temp.	TI	-40		85	°C	

Electrical Input/Output Characteristics

Parameter		Symbol	Min.	Typ	Max.	Unit	Note
Transmitter							
Diff. input voltage swing			200		2000	mVpp	1
Tx Disable input	H	VIH	2.0		Vcc+0.3	V	
	L	VIL	0		0.8		
Tx Fault output	H	VOH	2.0		Vcc+0.3	V	2
	L	VOL	0		0.8		
Input Diff. Impedance		Zin		100		Ω	
Receiver							
Diff. output voltage swing			400		1600	mVpp	3
Rx LOS Output	H	VOH	2.0		Vcc+0.3	V	2
	L	VOL	0		0.8		

Notes:

1. TD+/- are internally AC coupled with 100Ω differential termination inside the module.
2. Tx Fault and Rx LOS are open collector outputs, which should be pulled up with 4.7k to 10kΩ resistors on the host board. Pull up voltage between 2.0V and Vcc+0.3V.
3. RD+/- outputs are internally AC coupled, and should be terminated with 100Ω (differential) at the user SERDES.

Optical Characteristics

Parameter	Symbol	Min.	Typ	Max.	Unit	Note
Transmitter						
Operating Wavelength	λ	1470	1490	1510	nm	
Ave. output power (Enabled)	PAVE	3		7	dBm	1
Spectral Width (-20dB)				3	nm	
Mean Launched Power (TX Off)				-45	dB	
Extinction Ratio		9			dB	
Total Jitter	UI			0.43		

Output Optical Eye	Compliant with IEEE802.3 z (class 1 aser safety)					
Receiver						
Operating Wavelength	λ	1530	1550	1570	nm	
Receiver Sensitivity	PSEN1			-34	dBm	3
Overload	PAVE	-3			dBm	3
LOS Assert	Pa	-25			dBm	
LOS De-assert	Pd			-34	dBm	
LOS Hysteresis	Pd-Pa	0.5			dB	

Notes:

1.Measured at 1250Mb/s with PRBS 2 2^{23-1}NRZ test pattern.

2.Unfiltered, measured with a PRBS2^{23-1} test pattern @1.25Gbps

3.Measured at 1250Mb/s with PRBS 2^{23-1} NRZ test pattern for BER < $1x10^{-12}$

Pin Definitions And Functions

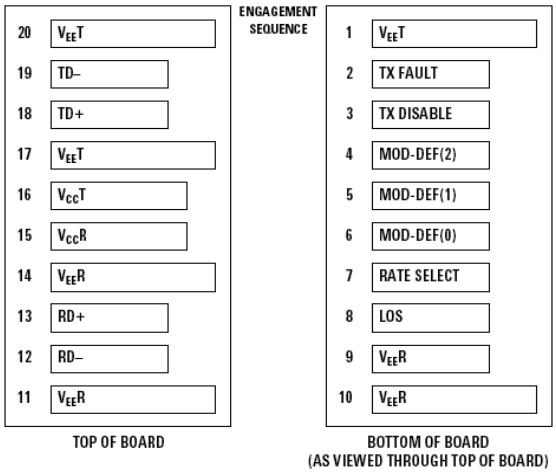

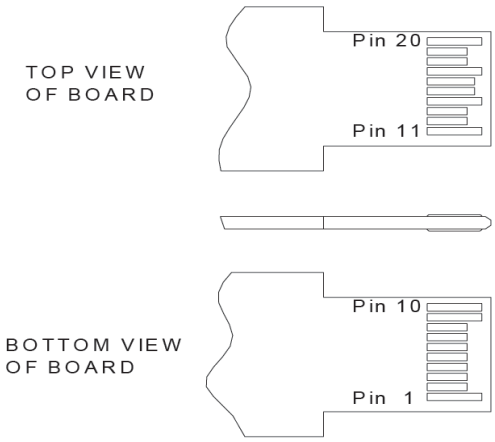

Pin	Symbol	Level / Logic	Description
1	VeeT		Module Transmitter Ground
2	Tx_Fault	LVTTL-O	Module Transmitter Fault Indication
3	Tx_DIS	LVTTL-I	Transmitter Disable; Active High Disable Transmitter Output
4	SDA	LVTTL-I	2-Wire Serial Interface Data Line
5	SCL	LVTTL-I/O	2-Wire Serial Interface Clock

6	MOD_ABS	LVTTL-O	Module Absent, connected to ground in the module
7	RS0		Not Connected
8	RX_LOS	LVTTL-O	Loss of Receiver Signal Indication
9	RS1		Not Connected
10	VeeR		Module Receiver Ground
11	VeeR		Module Receiver Ground
12	RD-	CML-O	Receiver Inverted Data Output
13	RD+	CML-O	Receiver Non-Inverted Data Output
14	VeeR		Module Receiver Ground
15	VccR		Module Receiver 3.3V Supply
16	VccT		Module Transmitter 3.3V Supply
17	VeeT		Module Transmitter Ground
18	TD+	CML-I	Transmitter Non-Inverted Data Input
19	TD-	CML-I	Transmitter Inverted Data Input
20	VeeT		Module Transmitter Ground

Notes:

1.When high, this output indicates a laser fault of some kind. Low indicates normal operation. And should be pulled up with a 4.7 – 10KΩ resistor on the host board.

2. TX disable is an input that is used to shut down the transmitter optical output. It is pulled up within the module with a 4.7 – 10KΩ resistor. Its states are:

Low (0 – 0.8V): Transmitter on (>0.8, < 2.0V): Undefined

High (2.0V~Vcc+0.3V): Transmitter Disabled Open: Transmitter Disabled

3.Mod-Def 0,1,2. These are the module definition pins. They should be pulled up with a 4.7K – 10KΩ resistor on the host board. The pull-up voltage shall be between 2.0V~Vcc+0.3V.

Mod-Def 0 has been grounded by the module to indicate that the module is present

Mod-Def 1 is the clock line of two wire serial interface for serial ID

Mod-Def 2 is the data line of two wire serial interface for serial ID

4.When high, this output indicates loss of signal (LOS). Low indicates normal operation.

5.RD+/-: These are the differential receiver outputs. They are AC coupled 100Ω differential lines which should be terminated with 100Ω (differential) at the user SERDES. The AC coupling is done inside the module and is thus not required on the host board.

6. TD+/-: These are the differential transmitter inputs. They are AC-coupled, differential lines with 100Ω differential termination inside the module. The AC coupling is done inside the module and is thus not required on the host board.

Diagnostics

Parameter	Symbol	Units	Min.	Max.	Accuracy	Note
Transceiver temperature	D_{Temp-E}	ºC	-45	+90	±5ºC	1
Transceiver supply voltage	$D_{Voltage}$	V	2.8	4.0	±3%	
Transmitter bias current	D_{Bias}	mA	2	80	±10%	2
Transmitter output power	$D_{Tx-Power}$	dBm	-3	+8	±3dB	
Receiver average input power	$D_{Rx-Power}$	dBm	-35	0	±3dB	

Notes:
1.When Operating temp.=0~70 ºC,the range will be min=-5,Max=+75
2. The accuracy of the Tx bias current is 10% of the actual current from the laser driver to the laser
3. Internal/ External Calibration compatible.

Functional Diagram

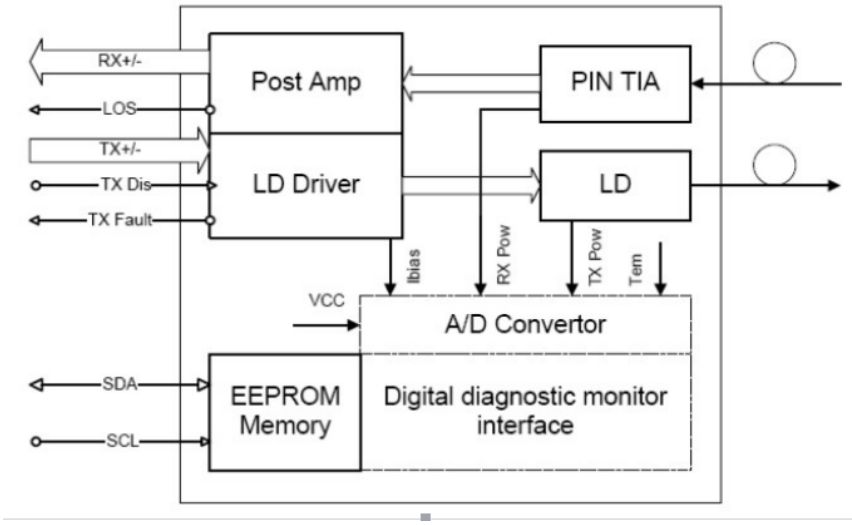

Typical Interface Circuit

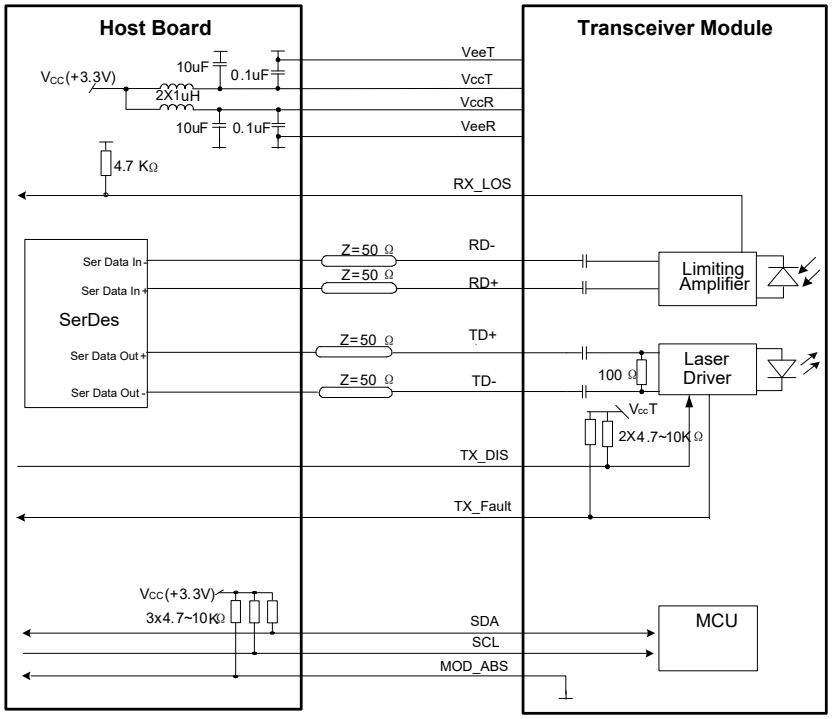

Package Dimensions

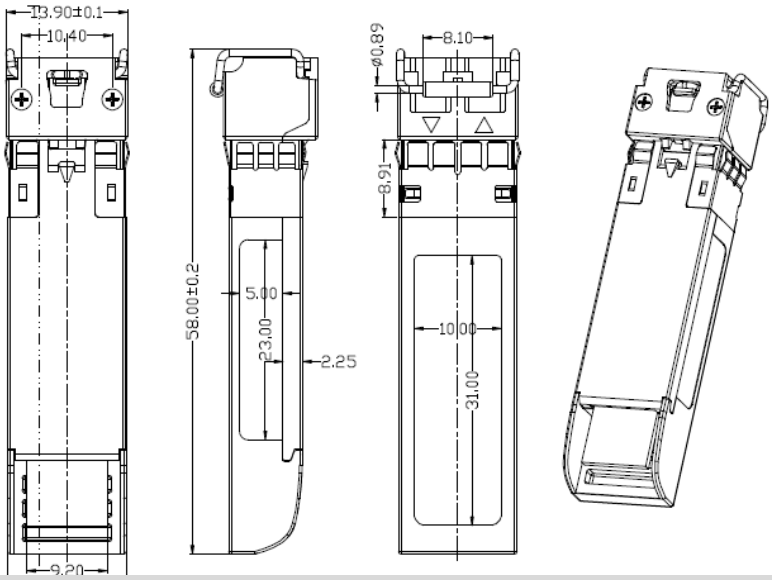

For More Information

FANG HANG TECH LIMITED

Office ： 908 Room, Jingyuan Building, 28 Bulong Rd, Longgang District,Shenzhen. China

Tel: +86-755-89584520

Fax: +86-755-89584520

sales@fanghangtech.com

www.fanghangtech.com