Product Features

- ✧ Dual data-rate of 1.25Gbps/1.063Gbps operation
- ✧ TX1550nm DFB laser
- ✧ RX1310 PIN photo detector for 20km transmission
- ✧ BIDI LC/UPC type pluggable optical interface
- ✧ Compliant with SFP MSA and SFF-8472 with simplex LC receptacle
- ✧ RoHS compliant and lead-free
- ✧ Single +3.3V power supply
- ✧ Support Digital Diagnostic Monitoring interface
- ✧ Case operating temperature Commercial: 0°C to +70°C
  Extended: -10°C to +80°C
  Industrial: -40°C to +85°C

Applications

- ✧ Gigabit Ethernet
- ✧ Fiber Channel
- ✧ Switch to Switch interface
- ✧ Switched backplane applications
- ✧ Router/Server interface
- ✧ Other Optical Links

Ordering Information

Part Number	Output Power	Rec. Sens	Data Rate	Wavelength	Distance
FH-SB5312CDL20 *FH-SB5312IDL20*	-9 ~ -3 db	-25db	1.25G	TX1550/RX1310nm	20km

General

FH-SB5312CDL20 Small Form Factor Pluggable (SFP) transceivers are compatible with the Small Form Factor Pluggable Multi-Sourcing Agreement (MSA). They simultaneously comply with Gigabit Ethernet as specified in IEEE STD 802.3 and 1x Fibre Channel as defined in FC-PI-2 Rev. 10.0 .They are RoHS compliant and lead-free

Absolute Maximum Ratings

Parameter	Symbol	Min.	Max.	Unit	Note
Supply Voltage	Vcc	-0.5	4.0	V	
Storage Temperature		-40	85	°C	
Relative Humidity			85	%	

Note: Stress in excess of the maximum absolute ratings can cause permanent damage to the module

General Operating Characteristics

Parameter	Symbol	Min.	Typ	Max.	Unit	Note
Data Rate			1250		Gb/s	
Supply Voltage	Vcc	3.13	3.3	3.47	V	
Supply Current	Icc_5			220	mA	
Operating Case Temp.	Tc	0		70	°C	

Electrical Input/Output Characteristics

Parameter		Symbol	Min.	Typ	Max.	Unit	Note
Transmitter							
Diff. input voltage swing			120		820	mVpp	1
Tx Disable input	H	VIH	2.0		Vcc+0.3	V	
	L	VIL	0		0.8		
Tx Fault output	H	VOH	2.0		Vcc+0.3	V	2
	L	VOL	0		0.8		
Input Diff. Impedance		Zin		100		Ω	
Receiver							
Diff. output voltage swing			340	650	800	mVpp	3
Rx LOS Output	H	VOH	2.0		Vcc+0.3	V	2
	L	VOL	0		0.8		

Note 1) TD+/- are internally AC coupled with 100Ω differential termination inside the module.

Note 2) Tx Fault and Rx LOS are open collector outputs, which should be pulled up with 4.7k to 10kΩ resistors on the host board. Pull up voltage between 2.0V and Vcc+0.3V.

Note 3) RD+/- outputs are internally AC coupled, and should be terminated with 100Ω (differential) at the user SERDES.

Optical Characteristics

Parameter	Symbol	Min.	Typ	Max.	Unit	Note
Transmitter						
Operating Wavelength	λC	1530	1550	1570	nm	
Ave. output power (Enabled)	Po	-9		-3	dBm	1
Extinction Ratio	ER	9			dB	1
RMS spectral width	Δλ			4	nm	
Rise/Fall time (20%~80%)	Tr/Tf			0.26	ps	2
Output Eye Mask	Compliant with IEEE802.3 z (class 1 laser safety)					
Receiver						
Operating Wavelength		1270	1310	1350	nm	
Sensitivity	Psen			-24	dBm	3
Min. overload	Pimax	-3			dBm	
LOS Assert	Pa	-35			dBm	
LOS De-assert	Pd			-23	dBm	4
LOS Hysteresis	Pd-Pa	0.5		6	dB	

Note 1)Measure at 2^23-1 NRZ PRBS pattern

2) Transmitter eye mask definition

3) Measured with Light source 1550nm(1310nm), ER=9dB; BER =<10^-12 @PRBS=2^23-1 NRZ.

4) When LOS de-asserted, the RX data+/- output is signal output.

Pin Definitions And Functions

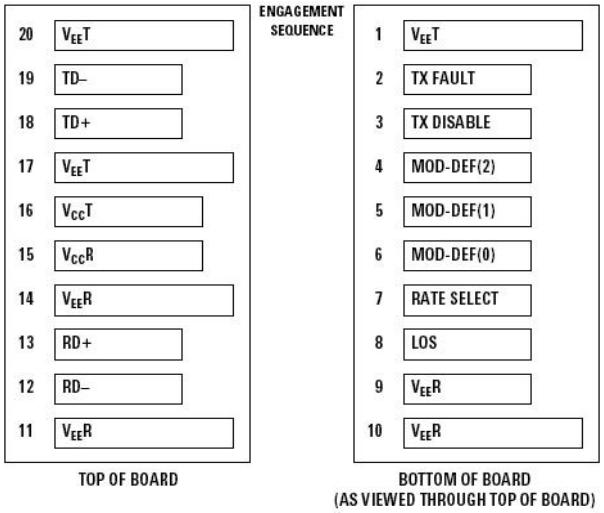

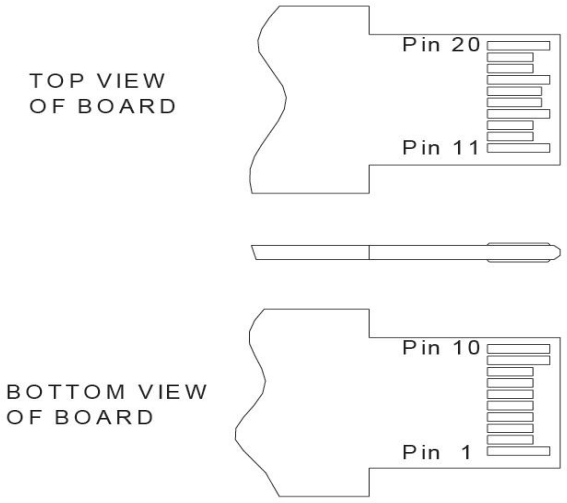

PIN#	Name	Function	Notes
1	VeeT	Tx ground	
2	Tx Fault	Tx fault indication, Open Collector Output, active “H”	1
3	Tx Disable	LVTTL Input, internal pull-up, Tx disabled on “H”	2
4	MOD-DEF2	2 wire serial interface data input/output (SDA)	3
5	MOD-DEF1	2 wire serial interface clock input (SCL)	3
6	MOD-DEF0	Model present indication	3
7	Rate select	No connection	
8	LOS	Rx loss of signal, Open Collector Output, active “H”	4
9	VeeR	Rx ground	
10	VeeR	Rx ground	
11	VeeR	Rx ground	
12	RD-	Inverse received data out	5
13	RD+	Received data out	5
14	VeeR	Rx ground	
15	VccR	Rx power supply	
16	VccT	Tx power supply	
17	VeeT	Tx ground	

18	TD+	Transmit data in	6
19	TD-	Inverse transmit data in	6
20	VeeT	Tx ground	

Notes:

1) When high, this output indicates a laser fault of some kind. Low indicates normal operation. And should be pulled up with a 4.7 – 10KΩ resistor on the host board.

2) TX disable is an input that is used to shut down the transmitter optical output. It is pulled up within the module with a 4.7 – 10KΩ resistor. Its states are:

Low (0 – 0.8V): Transmitter on (>0.8, < 2.0V): Undefined

High (2.0V~Vcc+0.3V): Transmitter Disabled Open: Transmitter Disabled

3) Mod-Def 0,1,2. These are the module definition pins. They should be pulled up with a 4.7K – 10KΩ resistor on the host board. The pull-up voltage shall be VccT or VccR.

Mod-Def 0 has been grounded by the module to indicate that the module is present

Mod-Def 1 is the clock line of two wire serial interface for serial ID

Mod-Def 2 is the data line of two wire serial interface for serial ID

4) When high, this output indicates loss of signal (LOS). Low indicates normal operation.

5) RD+/-: These are the differential receiver outputs. They are AC coupled 100Ω differential lines which should be terminated with 100Ω (differential) at the user SERDES. The AC coupling is done inside the module and is thus not required on the host board.

6) TD+/-: These are the differential transmitter inputs. They are AC-coupled, differential lines with 100Ω differential termination inside the module. The AC coupling is done inside the module and is thus not required on the host board.

Diagnostics

Parameter	Range	Unit	Accuracy	Calibration
Temperature	0 to +70 -40 to +85	°C	±3°C	Internal/ External
Voltage	3.0 to 3.6	V	±3%	Internal/ External
Bias Current	2 to 80	mA	±10%	Internal/ External
TX Power	-11 to -1	dBm	±3dB	Internal/ External
RX Power	-25 to 0	dBm	±3dB	Internal/ External

Functional Diagram

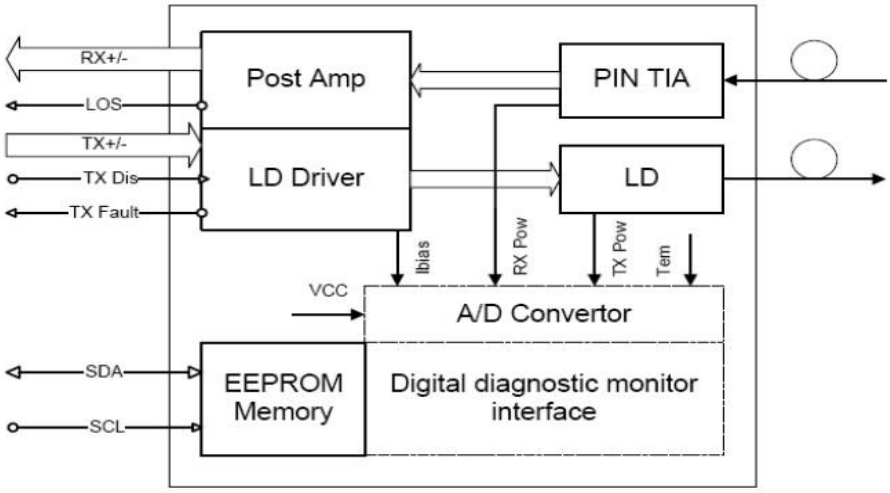

Package Dimensions

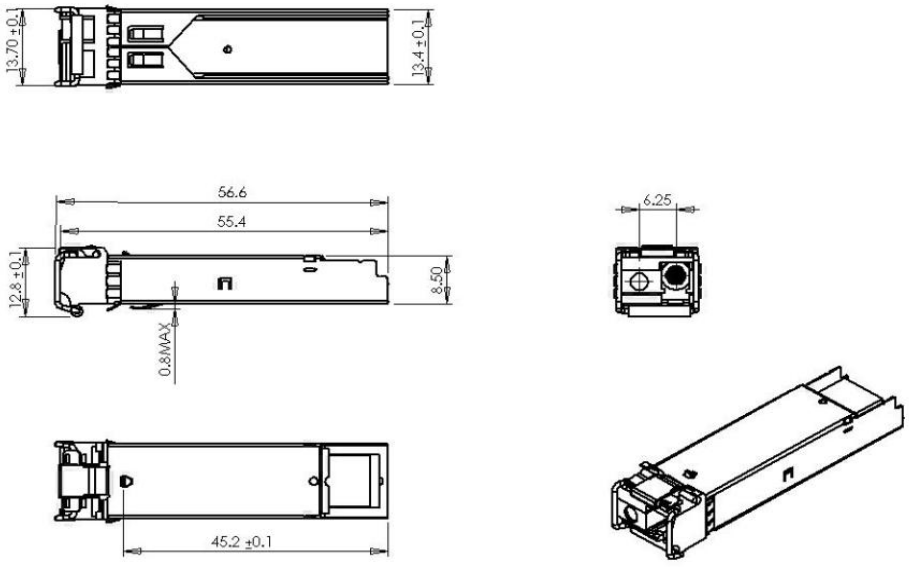

For More Information

FANG HANG TECH LIMITED

Add：908 Room, Jingyuan Building, 28 Bulong Rd, Longgang District,Shenzhen. China

Tel: +86-755-89584520

Fax: +86-755-89584520

sales@fanghangtech.com

www.fanghangtech.com